MEASURING
Section B

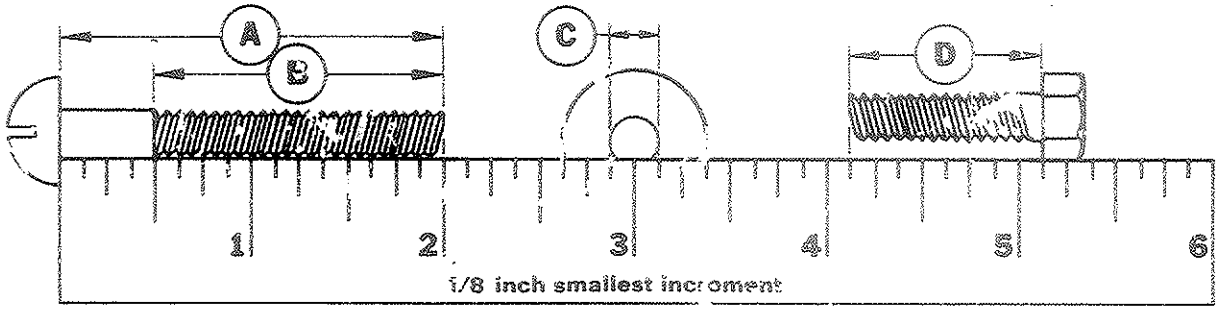

2"A: _____ inches

1 1/2"B: _____

1/4"C: _____

1"D: _____

1 15/16"E: _____

1 7/16"F: _____

1 1/16"G: _____

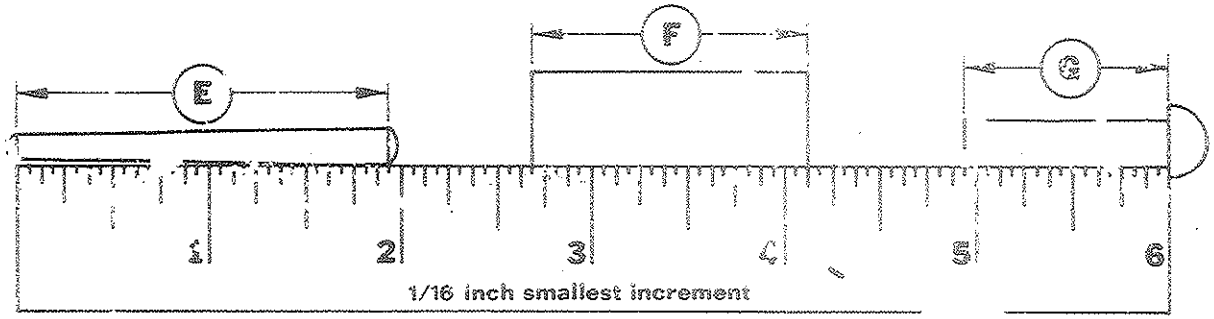

2.1 H: _____ centimeters

2.1 I: _____

1.5 J: _____

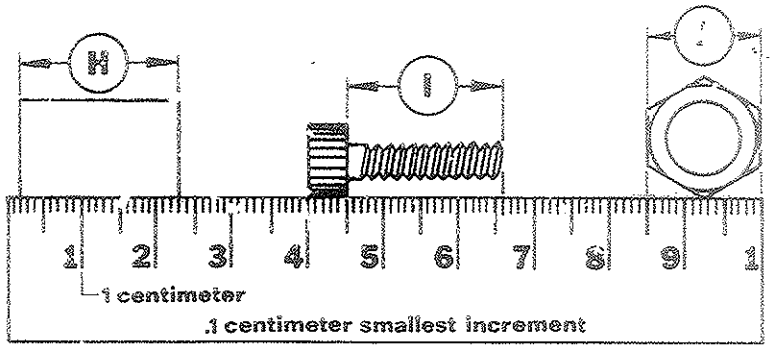

16WS009BR

COPYRIGHT VALPAR CORP. 1977